SKU JOURNAL OF ENGINEERING RESEARCH Vol-3 Issue-3
(NATIONAL PEER REVIEWED E-RESEARCH JOURNAL)
(July – September 2026)
E-ISSN 3048-930X

Automatic Temperature Control System for Lens-Based Solar Panels

Vishnu Kumar Patel
Assistant Professor
Department of Electrical Engineering
Shri Krishna University, Chhatarpur (M.P.)

ABSTRACT

Lens-based solar photovoltaic (PV) systems use optical lenses, particularly Fresnel lenses, to concentrate incident solar radiation onto a photovoltaic receiver. Concentration increases the solar energy flux reaching the cell and can reduce the required photovoltaic cell area; however, it also produces a substantial thermal load. Elevated cell temperature generally reduces photovoltaic electrical performance and can accelerate thermal degradation. Therefore, an effective thermal-management system is essential for the reliable operation of lens-based photovoltaic systems.

This paper proposes an Automatic Temperature Control System for Lens-Based Solar Panels based on real-time temperature measurement and closed-loop control. The proposed system uses a temperature sensor, ESP32 microcontroller, DC cooling fan, water-cooling pump, relay/MOSFET driver, and display unit. The controller continuously monitors the photovoltaic receiver temperature and automatically selects an appropriate cooling response according to predefined temperature thresholds. At moderate temperatures, the system operates the cooling fan, while at higher temperatures both air and water cooling are activated. An additional protection mechanism can reduce optical concentration by adjusting the lens position when the temperature approaches a critical limit. The proposed architecture is intended to maintain the photovoltaic receiver within a safer operating temperature range while minimizing unnecessary cooling energy consumption. The paper presents the system architecture, control methodology, mathematical model, experimental methodology, and a representative results framework. The proposed system provides a practical basis for intelligent thermal management of Fresnel-lens-based and other lens-based solar photovoltaic systems.

INDEX TERMS

Concentrated photovoltaic, Fresnel lens, photovoltaic temperature, automatic temperature control, thermal management, ESP32, air cooling, water cooling, solar energy.

I. INTRODUCTION

Solar photovoltaic technology has become an important method of renewable electricity generation. A conventional photovoltaic module converts only a fraction of incident solar radiation into

electricity, while a significant portion of the absorbed radiation appears as heat. Consequently, photovoltaic cell temperature can rise considerably during high solar irradiance conditions.

Concentrating photovoltaic (CPV) technology attempts to increase the incident solar radiation on a small photovoltaic receiver by using optical components such as lenses or mirrors. In a lens-based system, a Fresnel lens can collect sunlight over a relatively large aperture and focus it onto a smaller PV cell or receiver. The reduction in required cell area can be attractive because optical components may replace part of the expensive semiconductor area.

However, the increased optical flux also produces a higher thermal load on the receiver. Previous reviews have identified temperature rise, non-uniform illumination, and cooling requirements as important challenges in CPV systems. (Science Direct)

The temperature dependence of PV electrical performance is well established. For crystalline-silicon PV modules, increasing cell temperature generally causes a reduction in voltage and maximum power. Therefore, thermal management is particularly important in concentrated systems.

The problem becomes more significant when the concentration ratio is increased because a larger amount of solar energy is delivered to a smaller receiver area. (studylib.net) A further issue is that a lens itself can experience temperature-dependent optical behavior.

Studies of Fresnel-lens CPV systems have shown that lens temperature can influence optical performance and annual energy yield. (Science Direct) Conventional cooling systems are frequently operated continuously or manually. Continuous operation can consume unnecessary auxiliary energy, while manual operation cannot respond rapidly to changing solar irradiance.

An automatic feedback-based system can overcome these limitations by activating cooling only when required. This paper therefore proposes an automatic temperature-control system for lens-based solar panels.

The system continuously senses receiver temperature and controls air cooling, water cooling, and, where necessary, lens positioning.

II. LITERATURE REVIEW

A. Temperature Effect on Photovoltaic Performance

Skoplaki and Palyvos reviewed the temperature dependence of photovoltaic module electrical performance and showed that module temperature is an important parameter in predicting PV output.

A simplified relationship between PV power and cell temperature can be written as

$$P(Tc)=Pref\ [1-\gamma(Tc-Tref)]$$

(P(T_c)\): Power output at the actual cell temperature.

(P_{ref}\): Reference power output (usually measured at 25°C under Standard Test Conditions).

γ (Gamma): Temperature coefficient of power (indicates percentage of power lost per degree of temperature increase).

(T_{c}\): Actual temperature of the solar cell.

(T_{ref}\): Reference temperature (typically 25°C).

B. Thermal Problems in Concentrated Photovoltaics

Hasan et al. reviewed thermal aspects of concentrated photovoltaic systems and reported that concentration increases cell temperature, creating challenges for electrical performance and lifetime.

Various passive and active cooling methods have been investigated. (Science Direct) Royne et al. identified cooling as one of the major design concerns for photovoltaic cells under concentrated illumination. Their review emphasized low and uniform cell temperature, reliability, sufficient cooling capacity, and low auxiliary power consumption as important design requirements. (Science Direct)

C. Uniform Temperature Distribution

Non-uniform temperature distribution is another important problem in concentrated PV systems. Localized hot spots can increase thermal stress and produce electrical mismatch.

Reviews of PV cooling technologies emphasize that effective cooling should not only reduce average temperature but also improve temperature uniformity. (Science Direct) Therefore, the proposed system should ideally measure temperature at representative locations and provide cooling capable of reducing both average temperature and hot-spot formation.

D. Fresnel-Lens-Based PV Systems

Fresnel lenses are attractive for concentrating photovoltaic systems because they can provide high optical concentration while being relatively compact and lightweight.

Experimental and numerical studies have investigated point-focus Fresnel-lens CPV/T systems. For example, a reported 1090× point-focus Fresnel system achieved high electrical and thermal performance under experimental conditions, demonstrating both the potential and thermal-management requirements of concentrated systems. (Science Direct) Recent work on PV systems equipped with concentrating techniques has also demonstrated that temperature management can significantly influence power output. (Taylor & Francis Online)

E. Cooling Technologies

Different cooling approaches have been investigated for PV and CPV systems, including:

1. Natural convection
2. Forced-air cooling
3. Water cooling
4. Heat sinks
5. Micro channel cooling
6. Phase-change materials
7. Evaporative cooling
8. Hybrid air-water cooling

Recent reviews identify active, passive, and phase-change-based cooling as important research directions for concentrated PV thermal management. (Science Direct) The proposed system focuses on automatic air and water cooling, with optional optical-concentration reduction.

III. RESEARCH GAP

The literature demonstrates that cooling is essential for concentrated PV systems, but several practical challenges remain:

- Cooling should respond automatically to changing temperature.
- Auxiliary cooling power should be minimized.
- Temperature should remain reasonably uniform.
- Overheating should trigger a protection mechanism.
- Optical concentration should be considered together with thermal management.
- Real-time temperature, voltage, current, and power should be monitored simultaneously.

The proposed research addresses these requirements through an integrated microcontroller-based temperature-control system.

IV. OBJECTIVES

The objectives of this research are:

1. To develop a lens-based solar PV experimental system.
2. To continuously measure PV receiver temperature.
3. To develop an automatic closed-loop temperature-control system.
4. To operate air cooling according to temperature.
5. To activate water cooling when the temperature exceeds a higher threshold.
6. To provide over-temperature protection.
7. To investigate the effect of temperature control on PV voltage, current, power, and efficiency.
8. To reduce unnecessary auxiliary cooling energy.
9. To provide a platform suitable for future IoT-based monitoring.

V. PROPOSED SYSTEM METHODOLOGY

A. Overall System

The proposed system consists of five major subsystems:

1. Optical concentration subsystem
2. PV energy-conversion subsystem
3. Temperature-sensing subsystem
4. Automatic cooling subsystem
5. Monitoring and control subsystem

The optical subsystem consists of a Fresnel lens positioned above the photovoltaic receiver. The lens concentrates incident direct solar radiation onto the receiver. The temperature sensor is mounted near the PV cell/receiver. The sensor sends temperature data to the ESP32 microcontroller. The controller compares measured temperature with predetermined thresholds and activates the appropriate cooling device.

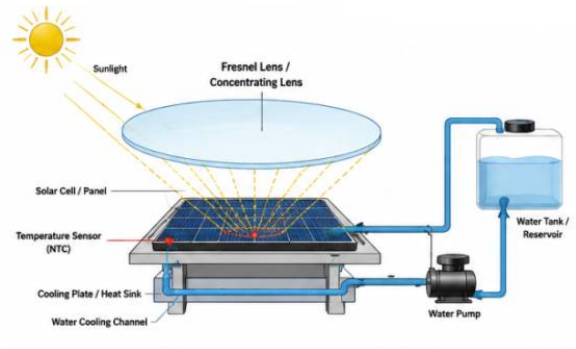

VI. BLOCK DIAGRAM

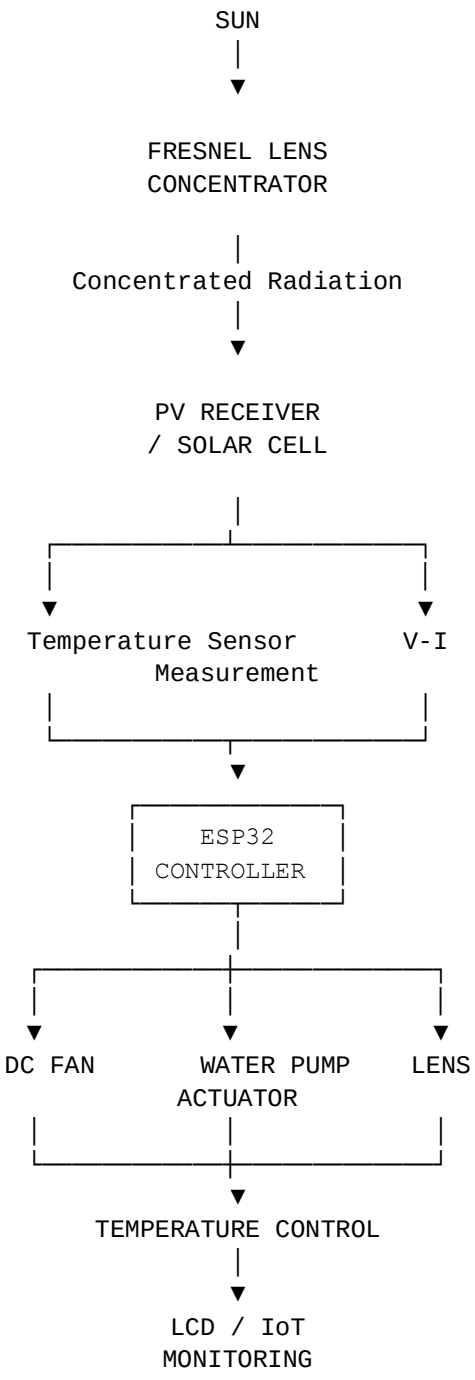

VII. CIRCUIT CONFIGURATION

A practical prototype circuit can be constructed using an ESP32 development board.

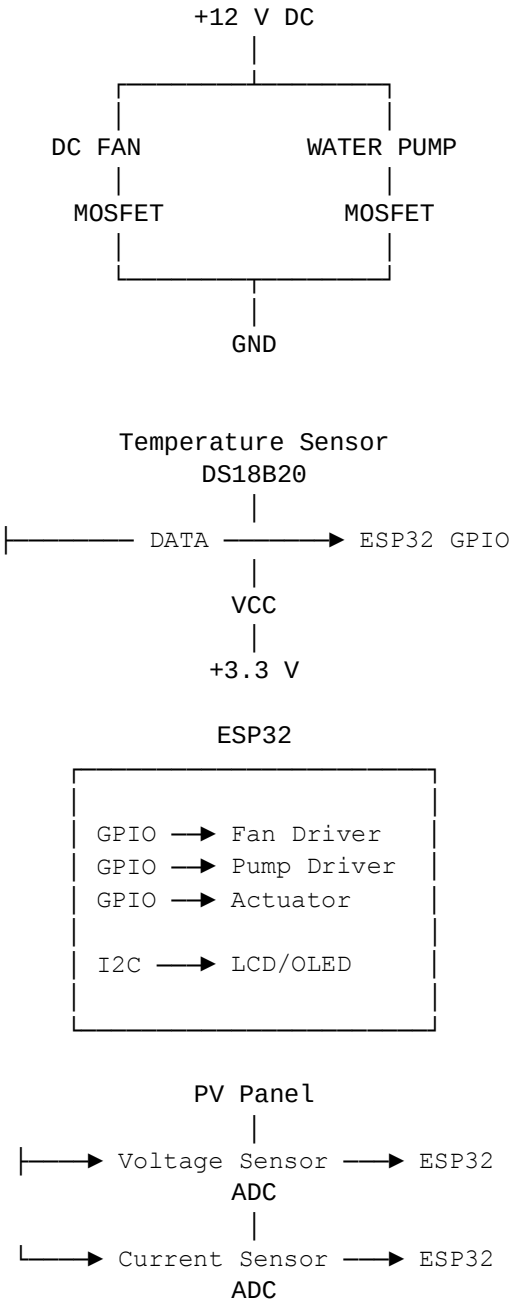

For a practical high-current system, the fan and pump should not be powered directly from the ESP32. A properly rated MOSFET or relay driver and an appropriate external power supply should be used.

VIII. TEMPERATURE CONTROL STRATEGY

The controller uses a multi-level temperature-control strategy.

A representative control scheme is

Temperature Condition	Control Action
T<45∘CT<45^\circ C	Fan OFF, Pump OFF
45∘C≤T<55∘C45^\circ C\leq T<55^\circ C	Fan ON
55∘C≤T<60∘C55^\circ C\leq T<60^\circ C	Fan + Pump ON
60∘C≤T<70∘C60^\circ C\leq T<70^\circ C	Maximum cooling
T≥70∘CT\geq70^\circ C	Emergency protection + reduce concentration

These values are design examples, not universal limits. The actual thresholds should be determined from the PV cell/module manufacturer's specifications, receiver construction, concentration ratio, and experimentally measured thermal behavior. IEC 61215-1-1:2021 addresses design qualification requirements for crystalline-silicon terrestrial PV modules and notes that environments with high operating temperatures may require consideration of higher-temperature testing. (IEC Webstore)

IX. CONTROL ALGORITHM

The automatic control algorithm is:

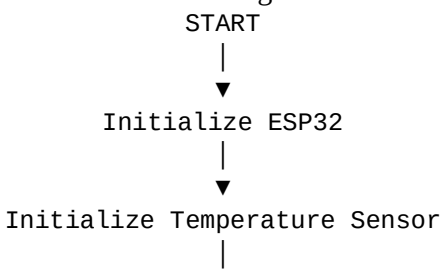

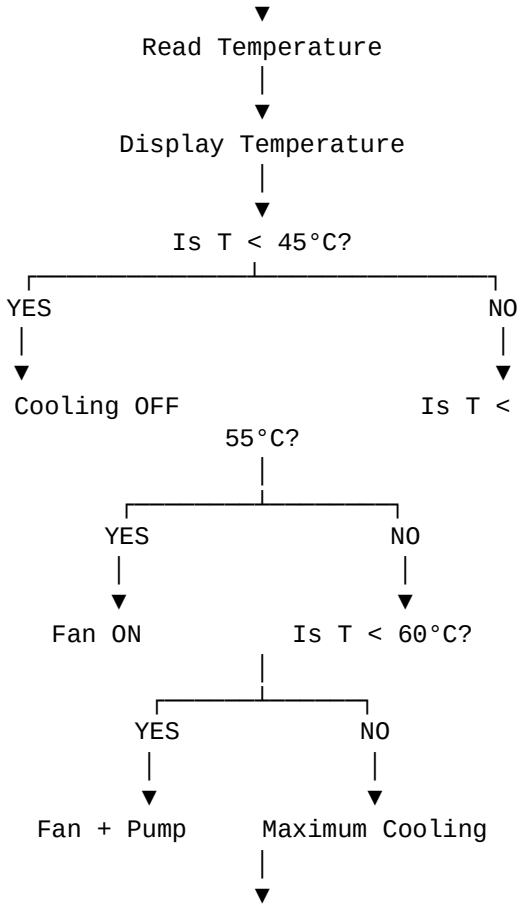

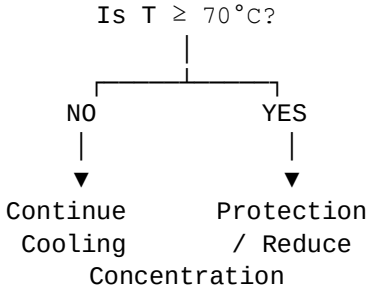

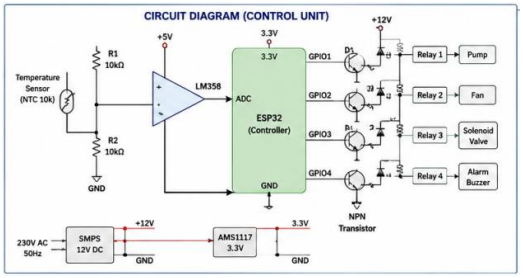

X. MATHEMATICAL MODEL

A. Electrical Power

The instantaneous electrical output power of the PV receiver is

Pout=VpvIpvP_

Where:

- Pout = electrical output power in watts
- Vpv = PV voltage in volts
- Ipv = PV current in amperes

B. Solar Input Power

The solar input power can be estimated as

Psolar=GA

Where:

- G = incident solar irradiance W/m^2)
- A = selected reference collection area m^2)

For a lens-based system, the reference area must be explicitly defined. For collector-level efficiency, the lens aperture/collector area is generally appropriate.

C. Electrical Efficiency

ηel=PoutGA×100\eta_{el}=\frac{P_{out}{G A}\times100

D. Temperature-Dependent Power

A simplified linear model can be expressed as

P(Tc)=Pref[1−γ(Tc−Tref)]

Where:

- Tc = cell temperature
- Tref = reference temperature
- Pref = power at reference conditions
- γ\gamma = power temperature coefficient

The exact coefficient should be obtained from the PV manufacturer's datasheet or experimentally determined.

E. Heat Balance

A simplified energy balance for the PV receiver can be written as

Qsolar = Pelectric+Qthermal

Where:

- Qsolar = absorbed solar energy
- Pelectric = electrical energy output
- Qconv = convective heat loss
- Qrad = radiative heat loss
- Qcool = heat removed by the active cooling system

When active cooling increases, Qcool increases and the receiver temperature can be reduced.

XI. COOLING SYSTEM

A. Air Cooling

A DC fan is activated when the receiver temperature reaches the first threshold.

Advantages:

- Simple
- Low cost

- Easy maintenance
- No water requirement

The main limitation is that air cooling may not provide sufficient heat removal at high concentration ratios.

B. Water Cooling

A water pump circulates water through a cooling plate or channel attached to the rear of the receiver. The heat removed by the coolant can be estimated from

$Q_{water} = \dot{m} C_p (T_{out} - T_{in})$

Where:

- M = mass flow rate of water
- Cp = specific heat capacity of water
- Tout = coolant outlet temperature
- Tin = coolant inlet temperature

C. Hybrid Cooling

The proposed system uses a staged cooling strategy:

Normal→Fan→Fan+Water→Protection

This approach avoids operating the water pump unnecessarily at lower temperatures.

XII. LENS POSITION CONTROL

An optional servo motor or linear actuator can be incorporated to reduce solar concentration during an over-temperature condition.

When

$T_c > T_{critical}$

The controller can change the lens position so that the focal spot moves away from the PV receiver or reduces the effective concentration. This mechanism provides a second level of protection in addition to active cooling.

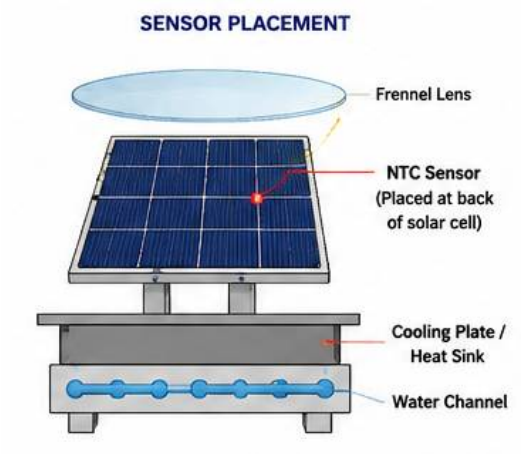

XIII. EXPERIMENTAL SETUP

The experimental setup should include:

- Fresnel lens
- PV cell or small PV module
- Temperature sensor
- ESP32 controller
- Voltage sensor
- Current sensor
- DC fan
- Water pump
- Cooling plate/channel
- Water reservoir
- Flow-control tubing
- LCD/OLED display
- Pyranometer or calibrated solar irradiance sensor
- Data logger

Two tests should be conducted.

Test 1: Without Automatic Cooling

The lens-based PV system is operated without active temperature control.

Test 2: With Automatic Cooling

The same system is operated using the proposed automatic controller.

The following parameters should be recorded at regular intervals:

Ta, Tc, G, V, I, P, η

Where:

- Ta = ambient temperature
- Tc = cell temperature
- G = solar irradiance
- V = PV voltage
- I = PV current
- P = output power
- H = electrical efficiency

XIV. RESULTS AND DISCUSSION

Important: The following table is a sample/illustrative results format, not measured experimental data.

TABLE I
SAMPLE COMPARISON OF CONTROLLED AND UNCONTROLLED OPERATION

Parameter	Without Cooling	With Automatic Cooling
Ambient Temperature	32°C	32°C
Solar Irradiance	850 W/m²	850 W/m²
Maximum PV Temperature	72°C	52°C
PV Voltage	17.2 V	18.4 V
PV Current	4.1 A	4.3 A
Output Power	70.5 W	79.1 W
Estimated Efficiency	13.8%	15.5%
Fan Energy Consumption	0 W	3 W
Pump Energy Consumption	0 W	8 W

These numbers are included only to demonstrate how experimental results can be presented. They must be replaced by actual measurements before submission. The expected trend is that the controlled system should maintain a lower and more stable PV receiver temperature than the uncontrolled system. Because PV voltage and maximum power generally decrease with increasing temperature, reducing the cell temperature can improve electrical performance under otherwise comparable operating conditions. (studylib. net) However, the net energy benefit must account for the power consumed by the cooling fan and pump:

$$P_{net} = P_{pv} - P_{fan} - P_{pump}$$

Therefore, a lower PV temperature does not automatically guarantee a higher net system output. The cooling system should be optimized to obtain the maximum net energy gain.

XV. PERFORMANCE INDICATORS

The proposed system can be evaluated using the following indicators.

1. Temperature Reduction

$$\Delta T = T_{uncontrolled} - T_{controlled}$$

2. Power Improvement

$$\Delta P = P_{controlled} - P_{uncontrolled}$$

3. Percentage Power Improvement

$$\%\ Improvement = \frac{P_{controlled} - P_{uncontrolled}}{P_{uncontrolled}} \times 100$$

4. Net Energy Gain

$$E_{net} = E_{pv} - E_{cooling}$$

This parameter is particularly important because the cooling system itself consumes energy.

XVI. EXPECTED CONTRIBUTIONS

The proposed research is expected to contribute:

1. A low-cost automatic temperature-control architecture.
2. Real-time monitoring of lens-based PV temperature.
3. Multi-stage cooling based on temperature thresholds.
4. Automatic overheating protection.
5. Integration of optical and thermal management.
6. A framework for comparing controlled and uncontrolled operation.
7. A platform for future IoT-based PV monitoring.

XVII. ADVANTAGES

The proposed system provides:

- Automatic operation
- Real-time temperature monitoring
- Reduced overheating risk
- Improved thermal stability
- Reduced manual intervention
- Modular cooling architecture
- Potential improvement in PV electrical performance
- Compatibility with ESP32/IoT technology
- Possibility of automatic lens repositioning

XVIII. LIMITATIONS

The following limitations should be considered:

1. Cooling devices consume auxiliary electrical power.
2. Water cooling requires additional components and maintenance.
3. Lens alignment strongly affects concentration.
4. Concentrated illumination may create local hot spots.
5. A single temperature sensor may not detect all hot spots.
6. The optimum temperature threshold is system-dependent.
7. Excessive optical concentration can exceed the cooling capacity.

XIX. FUTURE SCOPE

Future research can improve the proposed system in several ways.

A. PID-Based Temperature Control

Instead of simple ON/OFF control, a PID controller can continuously vary fan speed or coolant flow.

B. IoT Monitoring

The ESP32 can transmit:

- Temperature
- Voltage
- Current
- Power
- Irradiance
- Fan status
- Pump status

To a cloud dashboard.

C. Automatic Solar Tracking

The lens can be mounted on a two-axis tracking mechanism to maintain the focal spot on the receiver.

D. Multiple Temperature Sensors

Several sensors can be distributed over the receiver to identify temperature non-uniformity and hot spots.

E. CFD-Based Cooling Optimization

Computational fluid dynamics can be used to optimize cooling-channel geometry and flow distribution. Recent CPVT research specifically identifies CFD as an important tool for thermal-flow and cooling-channel optimization. (Science Direct)

F. Phase-Change Cooling

Phase-change materials can be investigated as an alternative or supplementary thermal-management method. Recent reviews identify PCM-based thermal regulation as an active research direction for concentrated PV systems. (Science Direct)

XX. CONCLUSION

This paper proposed an automatic temperature-control system for lens-based solar photovoltaic panels. The fundamental problem addressed is the increase in PV receiver temperature caused by concentrated solar radiation. Literature shows that high temperature can adversely affect electrical performance and long-term reliability, making thermal management particularly important in concentrated PV applications. (Science Direct)

The proposed system uses a temperature sensor and ESP32 microcontroller to implement closed-loop thermal control. A staged strategy is proposed in which the cooling fan operates at moderate temperatures, water cooling is activated at higher temperatures, and an optional lens-position actuator provides protection under critical thermal conditions.

The proposed architecture can maintain a more stable operating temperature while reducing unnecessary cooling operation. Nevertheless, the final performance must be evaluated using measured temperature, irradiance, voltage, current, power, and auxiliary cooling-energy data. The key performance indicator should be net energy gain, rather than PV power improvement alone.

The proposed system can serve as a foundation for developing intelligent, low-cost thermal management for Fresnel-lens-based and other concentrated photovoltaic systems. Future work will focus on experimental validation, PID control, IoT monitoring, multi-point temperature sensing, automatic solar tracking, and optimization of cooling energy consumption.

REFERENCES

1. E. Skoplaki and J. A. Palyvos, “On the temperature dependence of photovoltaic module electrical performance: A review of efficiency/power correlations,” *Solar Energy*, vol. 83, no. 5, pp. 614–624, 2009.
2. E. Skoplaki and J. A. Palyvos, “Operating temperature of photovoltaic modules: A survey of pertinent correlations,” *Renewable Energy*, vol. 34, no. 1, pp. 23–29, 2009. (studylib.net)

3. A. Hasan, J. Sarwar, and A. H. Shah, "Concentrated photovoltaic: A review of thermal aspects, challenges and opportunities," *Renewable and Sustainable Energy Reviews*, vol. 94, pp. 835–852, 2018. (Science Direct)
4. J. Royne, C. J. Dey, and D. R. Mills, "Cooling of photovoltaic cells under concentrated illumination: A critical review," *Solar Energy Materials and Solar Cells*, vol. 86, no. 4, pp. 451–483, 2005. (Science Direct)
5. S. Jakhar, M. S. Soni, and N. Gakkhar, "Historical and recent development of cooling techniques of concentrating photovoltaic technologies," *Renewable and Sustainable Energy Reviews*, vol. 60, pp. 41–59, 2016. (Science Direct)
6. Hasanuzzaman, A. B. M. A. Malek, M. M. Islam, A. K. Pandey, and N. A. Rahim, "Global advancement of cooling technologies for PV systems: A review," *Solar Energy*, vol. 137, 2016. (Science Direct)
7. M. A. F. R. Rosli *et al.*, "Recent progresses and challenges in cooling techniques of concentrated photovoltaic thermal system: A review with special treatment on phase change materials (PCMs) based cooling," *Solar Energy Materials and Solar Cells*, vol. 241, Art. no. 111739, 2022. (Science Direct)
8. J. Coventry, "A linear concentrator photovoltaic module: Analysis of non-uniform illumination and temperature effects on efficiency," *Solar Cells*, vol. 20, no. 1, pp. 27–39, 1987. (Science Direct)
9. M. Wiesenfarth *et al.*, "Estimation of the influence of Fresnel lens temperature on energy generation of a concentrator photovoltaic system," *Solar Energy Materials and Solar Cells*, vol. 99, pp. 333–338, 2012. (Science Direct)
10. A. Radwan, S. Ookawara, and M. Ahmed, "Thermal management of concentrator photovoltaic systems using two-phase flow boiling in double-layer microchannel heat sinks," *Applied Energy*, vol. 241, pp. 404–419, 2019. (IDEAS /RePEc)
11. J. F. Martínez, M. Steiner, M. Wiesenfarth, S. W. Glunz, and F. Dimroth, "Thermal analysis of passively cooled hybrid CPV module using Si cell as heat distributor," *IEEE Journal of Photovoltaics*, 2019, doi: 10.1109/JPHOTOV.2018.2877004. (Publica)
12. X. Wang *et al.*, "Outdoor performance analysis of a 1090× point-focus Fresnel high concentrator photovoltaic/thermal system with triple-junction solar cells," *Energy Conversion and Management*, vol. 100, pp. 191–200, 2015. (Science Direct)
13. X. Wang *et al.*, "Numerical simulation and experimental validation of a high concentration photovoltaic/thermal module based on point-focus Fresnel lens," *Applied Energy*, vol. 168, pp. 269–281, 2016. (Science Direct)
14.] A. Hasan *et al.*, "Uniform cooling of photovoltaic panels: A review," *Renewable and Sustainable Energy Reviews*, vol. 57, pp. 1520–1544, 2016. (Science Direct)
15. M. A. F. R. Rosli *et al.*, "A comprehensive review of cooling technologies for concentrated photovoltaic thermal systems," *Solar Energy Materials and Solar Cells*, 2022.

16. "Review of high concentration photovoltaic thermal hybrid systems for highly efficient energy cogeneration," *Renewable and Sustainable Energy Reviews*, vol. 163, Art. no. 112512, 2022. (DOI)
17. "Effective thermal management of photovoltaic modules equipped with innovative concentrating techniques," *International Journal of Green Energy*, 2025, doi: 10.1080/19397038.2025.2484219. (Taylor & Francis Online)
18. "A comprehensive review of CPVT solar systems: Structural configurations, thermal management strategies, and thermoelectric–CFD advances," *Energy Conversion and Management*, vol. 349, Art. no. 120826, 2026. (ScienceDirect)
19. IEC 61215-1:2021, *Terrestrial Photovoltaic (PV) Modules—Design Qualification and Type Approval—Part 1: Test Requirements*, International Electro technical Commission, 2021. (IEC Webstore)
20. IEC 61215-1-1:2021, *Terrestrial Photovoltaic (PV) Modules—Design Qualification and Type Approval—Part 1-1: Special Requirements for Testing of Crystalline Silicon Photovoltaic (PV) Modules*, International Electro technical Commission, 2021. (IECWebstore)